Industrial 1-Port BNC/RJ11 to 4-Port Gigabit Ethernet Extender

High Performance Industrial Gigabit Ethernet Extender

To fulfill the needs of long distance and higher speed required Ethernet over Coaxial or 2-wired UTP applications, PLANET Technology offers a new Industrial Ethernet Extender, IVC-234GT. It features one **BNC** port and one **RJ11** port for long-distance connection with the VDSL2 (Very-high-bit-rate Digital Subscriber Line 2) technology, and 4 **10/100/1000BASE-T** RJ45 Ethernet ports. Its slim-sized metal housing makes the placement of the unit convenient. Working well with a pervasive coaxial or RJ11 network, the IVC-234GT provides an excellent bandwidth of up to a total duplex data rate of **300Mbps** which can extend a maximum distance up to **1.2km.**

If the IP network that consists of HD IP camera, wireless access point, NVR and digital signage display requires an extension of beyond the 100-meter distance, the IVC-234GT will be the best option as it can transmit data over the coaxial cable or telephone wire. A 100-meter distance can only be extended on an UTP cable.

Long Reach Ethernet

- ITU-T G.993.5 G.Vectoring and G.INP
- Upstream/Downstream bandwidth up to 200/100Mbps
- CO/CPE mode selectable via DIP switch
- Selectable target band plan and SNR margin
- One BNC/RJ11 connector for VDSL connection
- Uses existing RG59/RG6 coaxial cable
- Used in pairs to extend Point-to-Point connection up to 1.2km
- Supports IEEE 802.1Q VLAN tag transparency

Industrial Case and Installation

- Slim-type IP30 metal case
- DIN rail and wall-mount design
- 12 to 48V DC, redundant power with polarity reverse protect function
- AC 24V power adapter acceptable
- Supports 6000 VDC Ethernet ESD protection
- -40 to 75 degrees C operating temperature
- Minimum installation time (Simply by Plug and Play)
- Supports extensive LED indicators for network diagnosis

Superior Upstream and Downstream Transmission

The design of the IVC-234GT is based on the two-core networking technology, **Gigabit Ethernet** and VDSL2. The IVC-234GT offers a stable yet high-speed point-to-point network access up to a duplex data transmission of 300Mbps. It provides 2 selective transmission modes -- **asymmetric** mode or **symmetric** mode -- for the transmission of upstream and downstream signals.

- **Asymmetric mode** – downstream up to **200Mbps** and upstream up to **100Mbps**
- **Symmetric mode** – downstream up to **150Mbps** and upstream up to **150Mbps**

The symmetric mode provides the similar transmission rate on both downstream and upstream while the asymmetric mode performs higher transmission quality in short range. In all, when the IVC-234GT is in the symmetric mode, it provides a better upstream performance, and when it is in the asymmetric mode, it gives a better downstream performance.

Ethernet over Long Distance Existing Coaxial or RJ11 Cable

The IVC-234GT is also a **Long Reach Ethernet (LRE)** solution which provides a quick replacement and smooth migration solution from the existing analog system to full digital system. It features two types of transmission, the coaxial or RJ11. A normal UTP cable can only be extended up to 100 meters, but with the IVC-234GT, the distance for Ethernet networking can be extended up to **1,200 meters (3,937ft.),** which is ideal for the following network applications:

- Long-distance IP network devices
- IP digital signage
- Cable TV to IPTV
- Distance video education
- Electronic billboards
- Other applications

If you have coaxial or RJ11 cable in your existing environment, you can install a pair of the IVC-234GT very simply without the need to build additional network wires, thus saving costs for network construction.

BNC and RJ11 Connection Diagrams

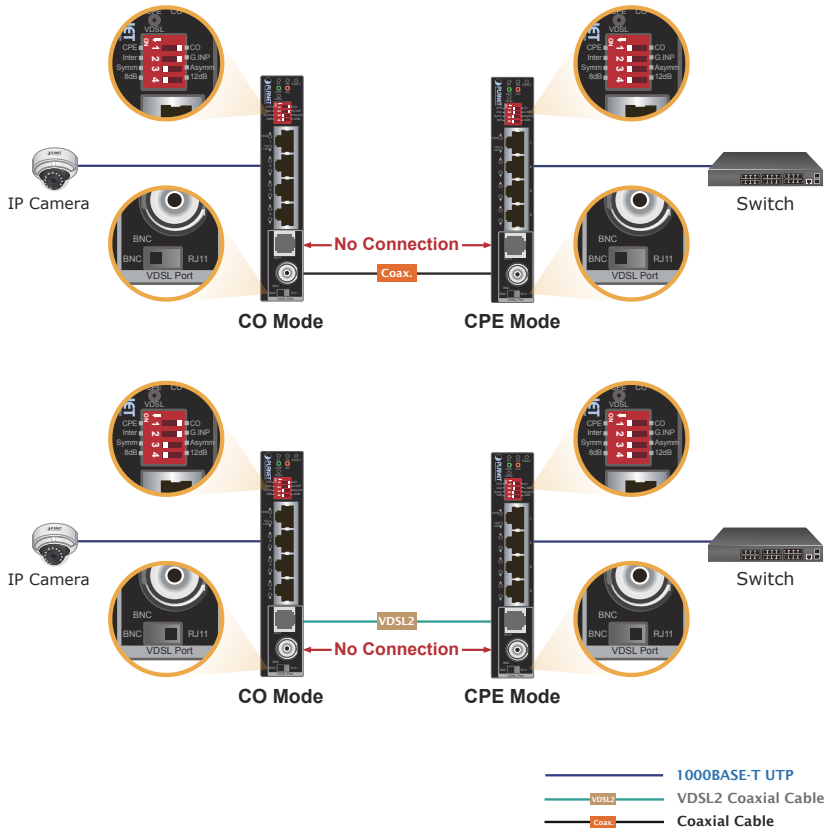

Easy and Flexible Installation

The IVC-234GT offers two operation modes, the client-side CPE and central-side CO, making any network applications easy and flexible. The CPE or CO mode can be adjusted by using the built-in DIP switch. For point-to-point connection, one IVC-234GT in CPE mode and the other one in CO mode must be set up as a pair of converters to perform the connection. This enables the administrator to efficiently manage the network over coaxial cable, making long-distance transmission better.

Selectable Target Bandplan

ADSL2+ Fallback

For ISPs providing ADSL broadband services, the IVC-234GT can support a downstream rate of up to 24Mbps and an upstream rate of 1Mbps with the ADSL2+ technology. The IVC-234GT can also be directly switched over to VDSL2 after the network upgrade.

Applications

Point-to-Point Application -- LAN to LAN Connection

One set of the IVC-234GT could be used to link two local Area networks that are located in different places. Through the coaxial cable, it could set up a 200/100Mbps asymmetric backbone, but one IVC-234GT must be **Master** (**CO** mode) and the other one is **Slave** (**CPE** mode).

LAN to LAN Connection

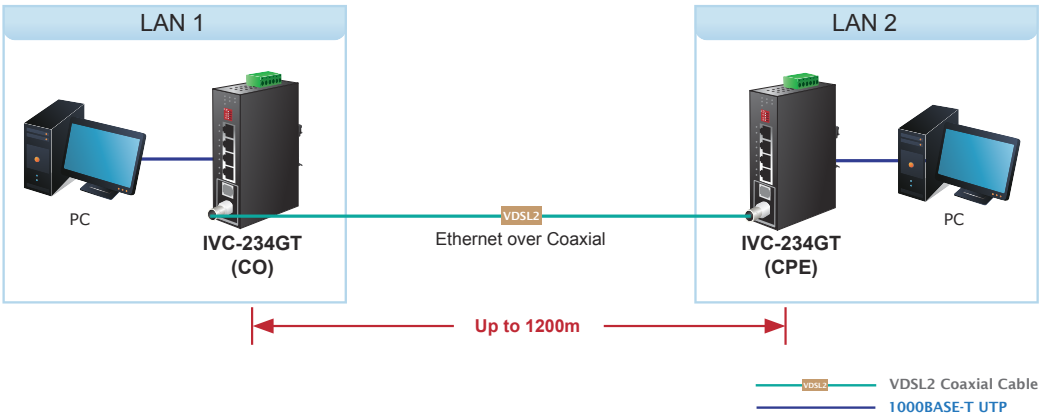

Community/Campus Surveillance and Security over IP

To take advantage of digital surveillance system and keep the benefits of coaxial cable/RJ11 of the IVC-234GT, communities, campuses and enterprises can upgrade their analog camera system to IP camera surveillance system without using additional new wires. As the IVC-234GT comes with one RJ45 port and one BNC Ethernet over Coaxial port, just plug in the UTP cable of IP camera to the Ethernet port and the existing coaxial cable to the BNC connector to easily deploy and extend the distance with signal conversion by transmitting the Ethernet data from the standard coaxial cable.

Applications of IP Surveillance

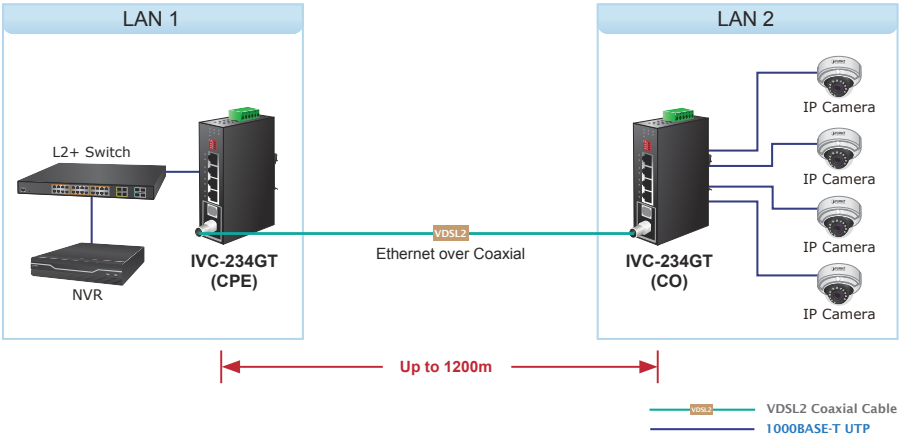

Specifications

Product		IVC-234GT	
Hardware Specifications			
TP interface		4 10/100/1000BASE-T RJ45 auto-MDI/MDI-X ports	
Interface	BNC	1 BNC female Ethernet over Coaxial port	
		Cabling	Coaxial cable: 75 ohm RG-6/U cable, less than12Ω/1000 ft RG-59/U cable, less than 30Ω/1000 ft.
		Maximum Distance	Max. 1.2km with data transmission (3.937ft.)
	RJ11	1 VDSL2/ADSL2+ RJ11 female phone jack Twisted-pair telephone wires (AWG-24 or better) up to 1.2km (3.937ft.)	
DIP Switch & Functionality		DIP-1	Select CO or CPE mode
		DIP-2	Select G.INP or Interleaved mode
		DIP-3	Select Band Profile (Asymmetric or Symmetric)
		DIP-4	Select SNR of 12dB or 8dB
LED Indicator		Power 1/Power 2: Green FAULT: Red 1000BASE-T LNK/ACT: Green 10/100BASE-TX LNK/ACK: Green VDSL: Green CO: Green CPE: Green	
ESD Protection		6KV DC	
Enclosure		IP30 slim metal case	
Installation		DIN-rail kit or wall-mount ear	
Dimensions (W x D x H)		32 x 135 x 87.8mm	
Weight		185g	
Power Requirement		DC input: Dual 12~48V DC, 0.4A max. 24V AC	
Power Consumption		5.7 watts	

Performance					
Upstream/ Downstream Performance Table with RJ11 Cable	CO DIP Switch / Distance (meters)	Interleave (Upstream/Downstream)			
		Asymmetric		Symmetric	
		8dB	12dB	8dB	12dB
	200	93/190	85/174	143/148	132/136
	400	67/164	59/146	118/119	103/104
	600	38/116	28/94	71/75	59/60
	800	24/59	22/49	49/36	38/27
	1000	9/45	7/40	21/25	15/24
	1200	6/30	3/28	16/24	6/20
	CO DIP Switch / Distance (meters)	G.INP (Upstream /Downstream)			
		Asymmetric		Symmetric	
		8dB	12dB	8dB	12dB
	200	92/190	85/174	143/148	129/136
	400	68/165	57/144	116/115	99/96
	600	37/112	28/94	71/69	61/55
	800	27/56	22/49	49/32	39/24
	1000	9/46	7/40	19/27	15/26
	1200	5/31	3/28	16/23	12/20
Upstream/ Downstream Performance Table with Coaxial Cable	CO DIP Switch / Distance (meters)	Interleave (Upstream/Downstream)			
		Asymmetric		Symmetric	
		8dB	12dB	8dB	12dB
	200	84/184	75/169	131/144	125/128
	400	49/148	54/128	93/118	89/99
	600	36/100	26/80	77/66	64/53
	800	21/50	17/39	44/30	37/26
	1000	7/42	5/29	20/25	19/28
	1200	5/27	3/28	13/27	15/20
	CO DIP Switch / Distance (meters)	G.INP (Upstream /Downstream)			
		Asymmetric		Symmetric	
		8dB	12dB	8dB	12dB
	200	89/185	79/166	140/144	117/123
	400	57/155	47/137	104/113	89/96
	600	33/75	31/73	62/73	52/43
	800	17/66	13/45	40/29	39/24
	1000	13/59	6/38	20/27	15/26
	1200	4/32	3/22	14/20	12/20

Switch Specifications	
Switch Processing Scheme	Store-and-Forward
Address Table	2K entries
Flow Control	Back pressure for half duplex IEEE 802.3x pause frame for full duplex
Jumbo Packet Size	9K bytes

System Specifications	
VDSL Compliance	VDSL-DMT ITU-T G.993.1 VDSL ITU-T G.997.1 ITU-T G.993.2 VDSL2 (Profile 17a/30a Support) ITU-T G.993.5 G. Vectoring ITU-T G.998 G.INP
ADSL Compliance	Capable of ADSL2/2+ standard ITU G.992.3 G.dmt.bis ITU G.992.5 G.dmt.bisplus Data Rate: Up to 24Mbps

System Specifications	
Standards Compliance	IEEE 802.3 Ethernet IEEE 802.3u Fast Ethernet IEEE 802.3ab Gigabit Ethernet ITU-T G.993.1 VDSL ITU-T G.997.1 ITU-T G.993.2 VDSL2 (Profile 17a/30a Support) ITU-T G.993.5 G.Vectoring and G.INP ITU-T G.998
Regulatory Compliance	FCC Part 15 Class A, CE

Environment	
Temperature	Operating: -40~75 degrees C Storage: -40~75 degrees C
Humidity	Operating: 5~95% (non-condensing) Storage: 5~95% (non-condensing)

Diagram

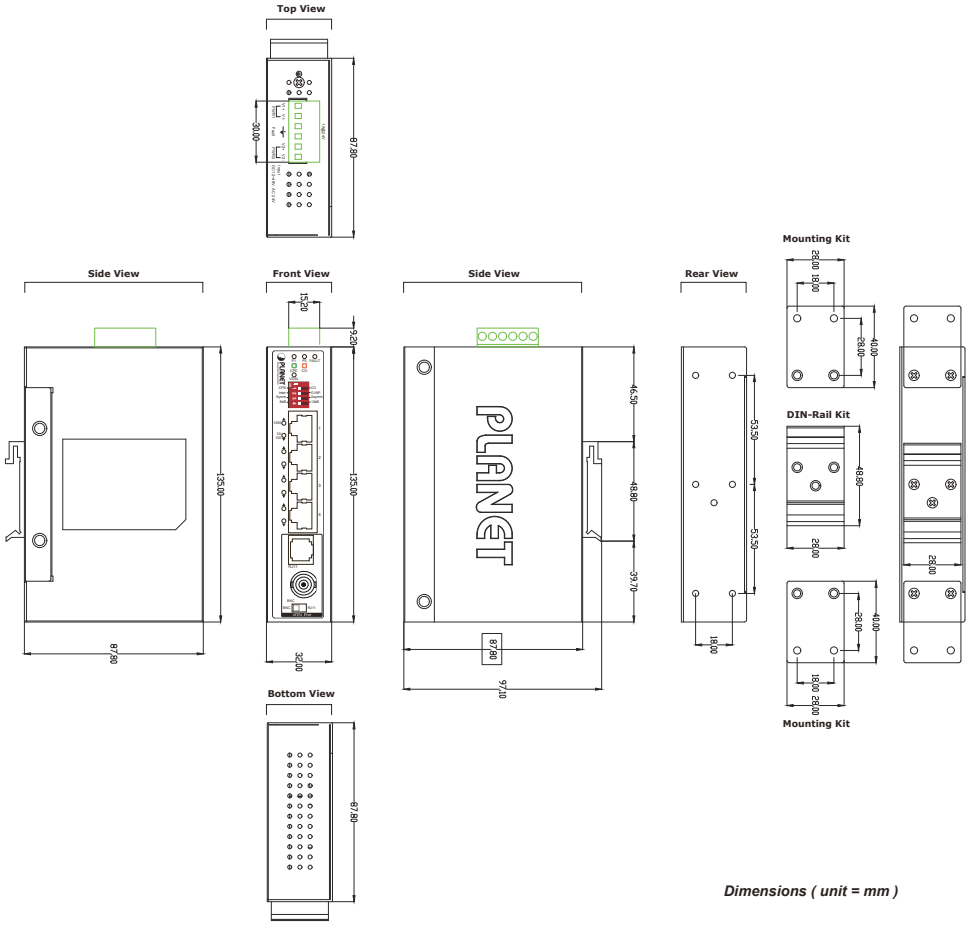

Dimensions (unit = mm)

Ordering Information

IVC-234GT	Industrial 1-Port BNC/RJ11 to 4-Port Gigabit Ethernet Extender

Related Products

VC-231G	1-Port 10/100/1000T Ethernet to VDSL2 Converter
VC-234G	4-Port 10/100/1000T Ethernet to VDSL2 Bridge
VC-232G	1-Port 10/100/1000T Ethernet over Coaxial Converter
VC-231GP	1-Port 10/100/1000T 802.3at PoE + Ethernet to VDSL2 Converter

PLANET Technology Corporation

11F., No.96, Minquan Rd., Xindian Dist., New Taipei City 231, Taiwan (R.O.C.)
Tel: 886-2-2219-9518 Fax: 886-2-2219-9528
Email: sales@planet.com.tw www.planet.com.tw

PLANET reserves the right to change specifications without prior notice. All brand names and trademarks are property of their respective owners. Copyright © 2018 PLANET Technology Corp. All rights reserved.